Cambridge International AS & A Level

Cambridge Assessment International Education
Cambridge International Advanced Subsidiary and Advanced Level

CANDIDATE NAME

CENTRE NUMBER

CANDIDATE NUMBER

5416248072

PHYSICS **9702/23**

Paper 2 AS Level Structured Questions **October/November 2019**

1 hour 15 minutes

Candidates answer on the Question Paper.

No Additional Materials are required.

READ THESE INSTRUCTIONS FIRST

Write your centre number, candidate number and name on all the work you hand in.
Write in dark blue or black pen.
You may use an HB pencil for any diagrams or graphs.
Do not use staples, paper clips, glue or correction fluid.
DO **NOT** WRITE IN ANY BARCODES.

Answer **all** questions.

Electronic calculators may be used.
You may lose marks if you do not show your working or if you do not use appropriate units.

At the end of the examination, fasten all your work securely together.
The number of marks is given in brackets [ ] at the end of each question or part question.

This document consists of **17** printed pages and **3** blank pages.

© UCLES 2019

Cambridge Assessment International Education

PapaCambridge

Data

speed of light in free space	$c = 3.00 \times 10^{8}\,\text{m s}^{-1}$
permeability of free space	$\mu_0 = 4\pi \times 10^{-7}\,\text{H m}^{-1}$
permittivity of free space	$\varepsilon_0 = 8.85 \times 10^{-12}\,\text{F m}^{-1}$
	$(\frac{1}{4\pi\varepsilon_0} = 8.99 \times 10^{9}\,\text{m F}^{-1})$
elementary charge	$e = 1.60 \times 10^{-19}\,\text{C}$
the Planck constant	$h = 6.63 \times 10^{-34}\,\text{J s}$
unified atomic mass unit	$1\,\text{u} = 1.66 \times 10^{-27}\,\text{kg}$
rest mass of electron	$m_e = 9.11 \times 10^{-31}\,\text{kg}$
rest mass of proton	$m_p = 1.67 \times 10^{-27}\,\text{kg}$
molar gas constant	$R = 8.31\,\text{J K}^{-1}\,\text{mol}^{-1}$
the Avogadro constant	$N_A = 6.02 \times 10^{23}\,\text{mol}^{-1}$
the Boltzmann constant	$k = 1.38 \times 10^{-23}\,\text{J K}^{-1}$
gravitational constant	$G = 6.67 \times 10^{-11}\,\text{N m}^2\,\text{kg}^{-2}$
acceleration of free fall	$g = 9.81\,\text{m s}^{-2}$

© UCLES 2019

PapaCambridge

Formulae

uniformly accelerated motion	$s = ut + \frac{1}{2}at^2$ $v^2 = u^2 + 2as$
work done on/by a gas	$W = p\Delta V$
gravitational potential	$\phi = -\frac{Gm}{r}$
hydrostatic pressure	$p = \rho gh$
pressure of an ideal gas	$p = \frac{1}{3}\frac{Nm}{V}\langle c^2 \rangle$
simple harmonic motion	$a = -\omega^2 x$
velocity of particle in s.h.m.	$v = v_0 \cos \omega t$ $v = \pm \omega \sqrt{(x_0^2 - x^2)}$
Doppler effect	$f_o = \frac{f_s v}{v \pm v_s}$
electric potential	$V = \frac{Q}{4\pi\varepsilon_0 r}$
capacitors in series	$1/C = 1/C_1 + 1/C_2 + \ldots$
capacitors in parallel	$C = C_1 + C_2 + \ldots$
energy of charged capacitor	$W = \frac{1}{2}QV$
electric current	$I = Anvq$
resistors in series	$R = R_1 + R_2 + \ldots$
resistors in parallel	$1/R = 1/R_1 + 1/R_2 + \ldots$
Hall voltage	$V_H = \frac{BI}{ntq}$
alternating current/voltage	$x = x_0 \sin \omega t$
radioactive decay	$x = x_0 \exp(-\lambda t)$
decay constant	$\lambda = \frac{0.693}{t_{\frac{1}{2}}}$

© UCLES 2019

[Turn over

PapaCambridge

Answer **all** the questions in the spaces provided.

1 **(a)** Determine the SI base units of the moment of a force.

SI base units ..... [1]

(b) A uniform square sheet of card ABCD is freely pivoted by a pin at a point P. The card is held in a vertical plane by an external force in the position shown in Fig. 1.1.

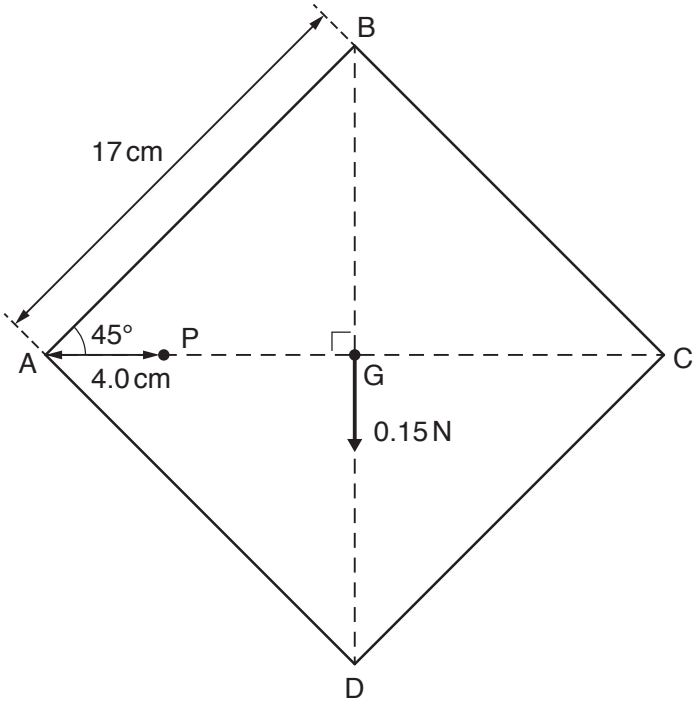

Fig. 1.1 (not to scale)

The card has weight 0.15 N which may be considered to act at the centre of gravity G. Each side of the card has length 17 cm. Point P lies on the horizontal line AC and is 4.0 cm from corner A. Line BD is vertical.

The card is released by removing the external force. The card then swings in a vertical plane until it comes to rest.

© UCLES 2019

PapaCambridge

(i) Calculate the magnitude of the resultant moment about point P acting on the card immediately after it is released.

moment = ... N m [2]

(ii) Explain why, when the card has come to rest, its centre of gravity is vertically below point P.

.....

.....

.....

..... [2]

[Total: 5]

PapaCambridge

2 **(a)** State what is meant by *work done*.

.....

..... [1]

(b) A lift (elevator) of weight 13.0 kN is connected by a cable to a motor, as shown in Fig. 2.1.

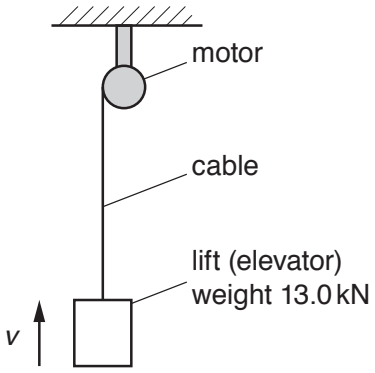

Fig. 2.1

The lift is pulled up a vertical shaft by the cable. A constant frictional force of 2.0 kN acts on the lift when it is moving. The variation with time t of the speed v of the lift is shown in Fig. 2.2.

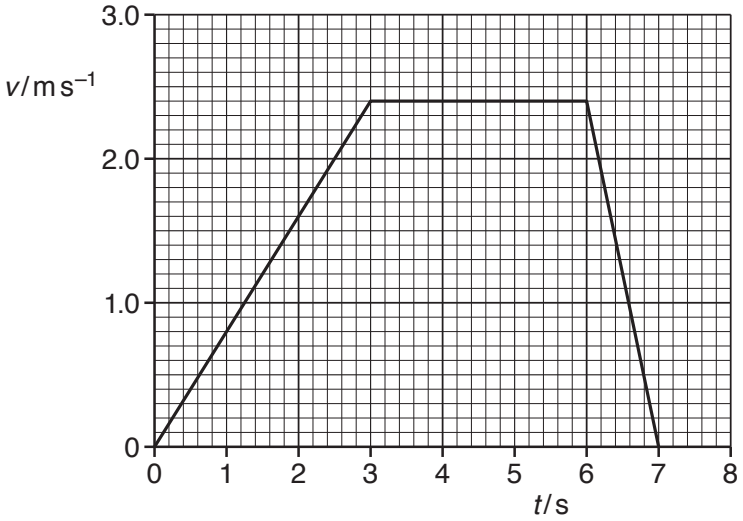

Fig. 2.2

© UCLES 2019

PapaCambridge

(i) Use Fig. 2.2 to determine:

1. the acceleration of the lift between time $t = 0$ and $t = 3.0\,s$

acceleration = ... $m\,s^{-2}$ [2]

2. the work done by the motor to raise the lift between time $t = 3.0\,s$ and $t = 6.0\,s$.

work done = ... J [2]

(ii) The motor has an efficiency of 67%. The tension in the cable is $1.6 \times 10^4\,N$ at time $t = 2.5\,s$.

Determine the input power to the motor at this time.

input power = ... W [3]

(iii) State and explain whether the increase in gravitational potential energy of the lift from time $t = 0$ to $t = 7.0\,s$ is less than, the same as, or greater than the work done by the motor. A calculation is not required.

.....

..... [1]

[Total: 9]

© UCLES 2019

[Turn over

PapaCambridge

3 **(a)** State the property of an object that experiences a force when the object is placed in:

(i) a gravitational field

..... [1]

(ii) an electric field.

..... [1]

(b) A potential difference of 1.2×10^3 V is applied between a pair of horizontal metal plates in a vacuum, as shown in Fig. 3.1.

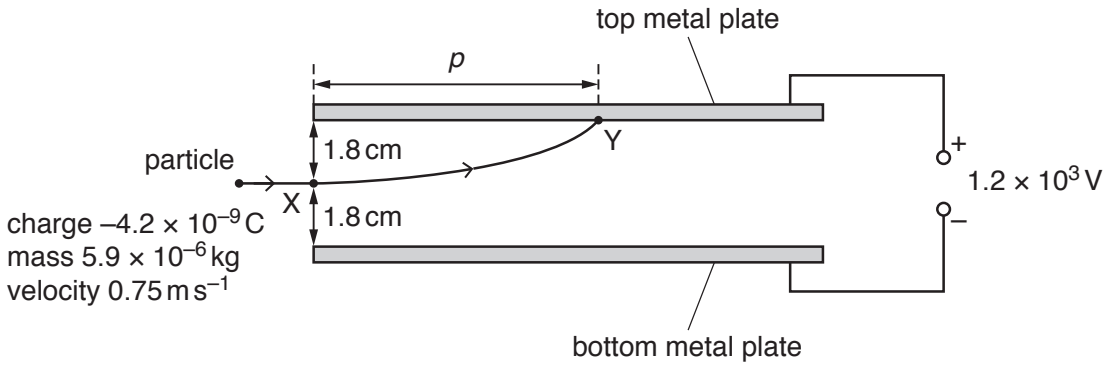

Fig. 3.1 (not to scale)

The separation of the plates is 3.6 cm. The electric field between the plates is uniform.

A particle of mass 5.9×10^{-6} kg and charge -4.2×10^{-9} C enters the field at point X with a horizontal velocity of 0.75 m s^{-1} along a line midway between the two plates.
The particle is deflected by the field and hits the top plate at point Y.

(i) Calculate the magnitude of the electric force acting on the particle in the field.

electric force = ... N [3]

© UCLES 2019

PapaCambridge

(ii) By considering the resultant vertical force acting on the particle, show that the acceleration of the particle in the electric and gravitational fields is $14\,m\,s^{-2}$.

[4]

(iii) Determine:

1. the time taken for the particle to move from X to Y

time taken = ... s [2]

2. the distance p of point Y from the left-hand edge of the top plate.

p = ...m [1]

[Total: 12]

PapaCambridge

BLANK PAGE

© UCLES 2019

PapaCambridge

4 A ball X moves along a horizontal frictionless surface and collides with another ball Y, as illustrated in Fig. 4.1.

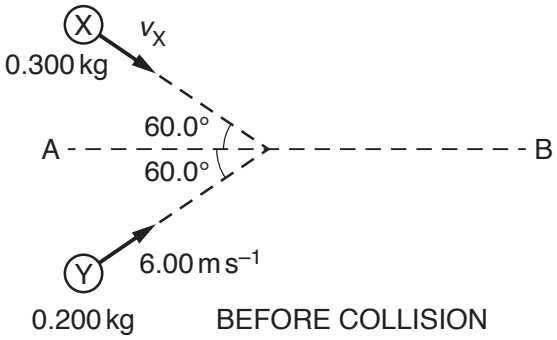

Fig. 4.1 (not to scale)

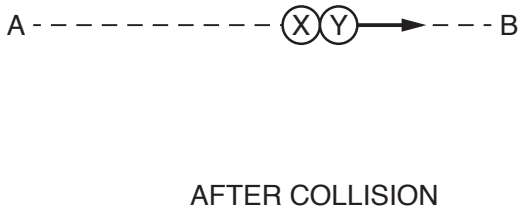

Fig. 4.2 (not to scale)

Ball X has mass 0.300 kg and initial velocity v_X at an angle of 60.0° to line AB.
Ball Y has mass 0.200 kg and initial velocity 6.00 m s^{-1} at an angle of 60.0° to line AB.
The balls stick together during the collision and then travel along line AB, as illustrated in Fig. 4.2.

(a) (i) Calculate, to three significant figures, the component of the initial momentum of ball Y that is perpendicular to line AB.

component of momentum = ... kg m s^{-1} [2]

(ii) By considering the component of the initial momentum of each ball perpendicular to line AB, calculate, to three significant figures, v_X.

v_X = ...m s^{-1} [1]

(iii) Show that the speed of the two balls after the collision is 2.4 m s^{-1}.

[2]

PapaCambridge

(b) The two balls continue moving together along the horizontal frictionless surface towards a spring, as illustrated in Fig. 4.3.

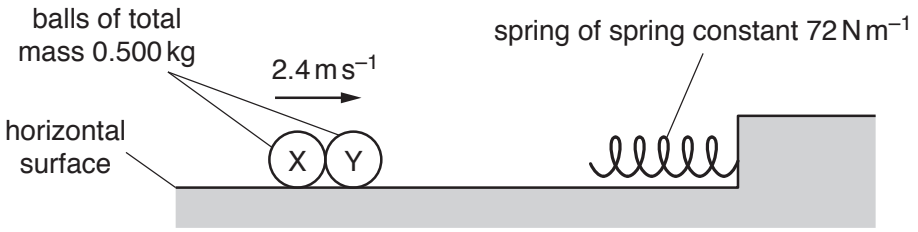

Fig. 4.3

The balls hit the spring and remain stuck together as they decelerate to rest. All the kinetic energy of the balls is converted into elastic potential energy of the spring. The energy E stored in the spring is given by

$$E = \frac{1}{2}kx^2$$

where k is the spring constant of the spring and x is its compression.
The spring obeys Hooke's law and has a spring constant of $72\,\text{N}\,\text{m}^{-1}$.

(i) Determine the maximum compression of the spring caused by the two balls.

maximum compression = ...m [3]

© UCLES 2019

PapaCambridge

(ii) On Fig. 4.4, sketch graphs to show the variation with compression x of the spring, from zero to maximum compression, of:

1. the magnitude of the deceleration a of the balls

2. the kinetic energy E_k of the balls.

Numerical values are not required.

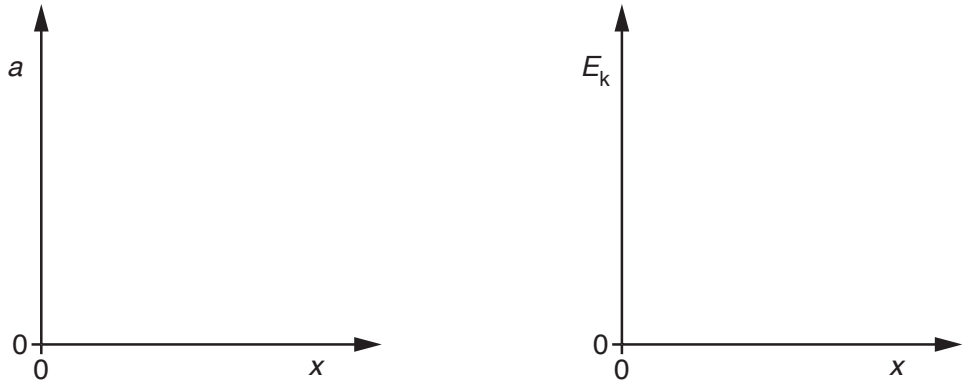

[3]

Fig. 4.4

[Total: 11]

© UCLES 2019

[Turn over

PapaCambridge

5 **(a)** Light waves emerging from the slits of a diffraction grating are coherent and produce an interference pattern.

Explain what is meant by:

(i) *coherence*

.....

..... [1]

(ii) *interference*.

.....

..... [1]

(b) A narrow beam of light from a laser is incident normally on a diffraction grating, as shown in Fig. 5.1.

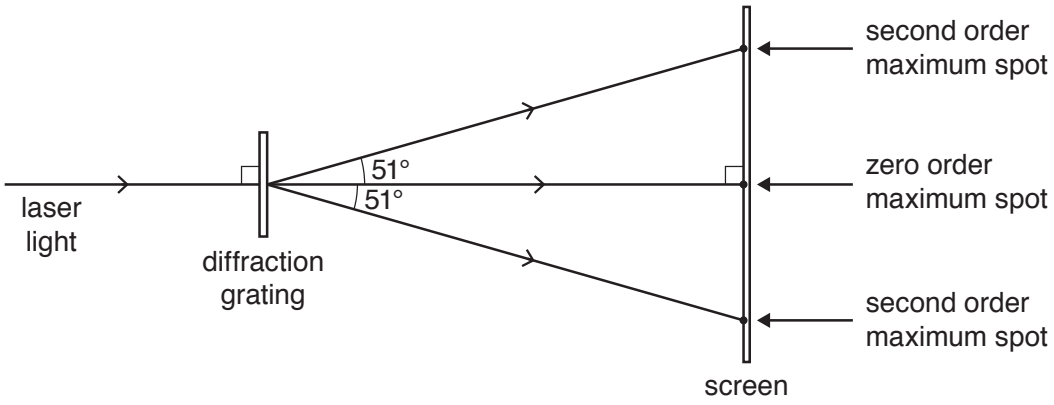

Fig. 5.1 (not to scale)

Spots of light are seen on a screen positioned parallel to the grating. The angle corresponding to each of the **second** order maxima is 51°. The number of lines per unit length on the diffraction grating is $6.7 \times 10^5\,m^{-1}$.

(i) Determine the wavelength of the light.

wavelength = ... m [2]

© UCLES 2019

PapaCambridge

(ii) State and explain the change, if any, to the distance between the second order maximum spots on the screen when the light from the laser is replaced by light of a shorter wavelength.

.....

.....

.....[1]

[Total: 5]

PapaCambridge

6 A battery of electromotive force (e.m.f.) 12 V and negligible internal resistance is connected to a network of two lamps and two resistors, as shown in Fig. 6.1.

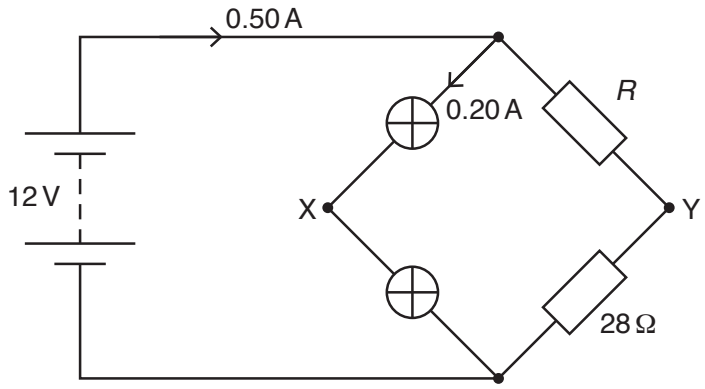

Fig. 6.1

The two lamps in the circuit have equal resistances. The two resistors have resistances R and 28 Ω. The lamps are connected at junction X and the resistors are connected at junction Y. The current in the battery is 0.50 A and the current in the lamps is 0.20 A.

(a) Calculate:

(i) the resistance of each lamp

resistance = ... Ω [2]

(ii) resistance R.

R = ... Ω [2]

(b) Determine the potential difference V_{XY} between points X and Y.

V_{XY} = ... V [3]

© UCLES 2019

PapaCambridge

(c) Calculate the ratio

$$\frac{\text{total power dissipated by the lamps}}{\text{total power produced by the battery}}.$$

ratio = ... [2]

(d) The resistor of resistance R is now replaced by another resistor of lower resistance.

State and explain the effect, if any, of this change on the ratio in **(c)**.

.....

.....

.....

.....

..... [2]

[Total: 11]

© UCLES 2019

[Turn over

PapaCambridge

7 A stationary nucleus of a radioactive isotope X decays by emitting an α-particle to produce a nucleus of neptunium-237 and 5.5 MeV of energy. The decay is represented by

$$X \longrightarrow {}^{237}_{93}Np + \alpha + 5.5\,MeV.$$

(a) Calculate the number of protons and the number of neutrons in a nucleus of X.

number of protons = ...

number of neutrons = ...
[2]

(b) Explain why the energy transferred to the α-particle as kinetic energy is less than the 5.5 MeV of energy released in the decay process.

.....

..... [1]

(c) A sample of X is used to produce a beam of α-particles in a vacuum. The number of α-particles passing a fixed point in the beam in a time of 30 s is 6.9×10^{11}.

(i) Calculate the average current produced by the beam of α-particles.

current = ... A [2]

(ii) Determine the total power, in W, that is produced by the decay of 6.9×10^{11} nuclei of X in a time of 30 s.

power = ... W [2]

[Total: 7]

© UCLES 2019

PapaCambridge

BLANK PAGE

© UCLES 2019

PapaCambridge

BLANK PAGE

Permission to reproduce items where third-party owned material protected by copyright is included has been sought and cleared where possible. Every reasonable effort has been made by the publisher (UCLES) to trace copyright holders, but if any items requiring clearance have unwittingly been included, the publisher will be pleased to make amends at the earliest possible opportunity.

To avoid the issue of disclosure of answer-related information to candidates, all copyright acknowledgements are reproduced online in the Cambridge Assessment International Education Copyright Acknowledgements Booklet. This is produced for each series of examinations and is freely available to download at www.cambridgeinternational.org after the live examination series.

Cambridge Assessment International Education is part of the Cambridge Assessment Group. Cambridge Assessment is the brand name of the University of Cambridge Local Examinations Syndicate (UCLES), which itself is a department of the University of Cambridge.

© UCLES 2019

PapaCambridge